ADVANCED CYLINDER PRODUCTS

THE LEADER IN PNEUMATIC CYLINDERS

50850 CENTRAL INDUSTRIAL DRIVE
SHELBY TWP., MI 48315
PHONE: 586-991-2445
FAX: 267-295-8585

ALONG WITH THE COMMON CYLINDERS OFFERED IN THIS CATALOG

ADVANCED CYLINDER PRODUCTS ALSO OFFERS:

- DUAL CYLINDERS UP TO 6” BORE
- TRIPLE CYLINDERS UP TO 6” BORE
- AUTOMOTIVE DESIGN CYLINDERS
- PRE-LUBE CYLINDERS
- RETRACT CYLINDERS
- HYDRAULIC CYLINDERS
- ASSIST SYTLE CYLINDERS
- CYLINDER REPAIR FOR ALL MAKES AND MODELS
- PART REPLACEMENT FOR ALL CYLINDERS
- SEAL KITS
- REPAIR KITS
- IN-HOUSE ENGINEERING
- REVERSE ENGINEERING CAPABILITY
- ALL INDUSTRY MOUNTS AVAILABLE
- 5 WEEK DELIVERY ON ALL COMMON CYLINDERS
- 100% QUALITY
- ALL PRODUCTS WARRANTED

ACP PNEUMATIC CYLINDERS (ROD END SHEET)

A

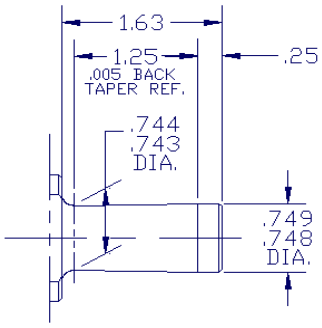

A+

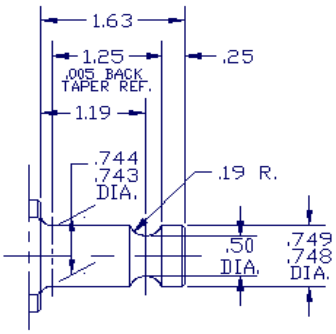

G

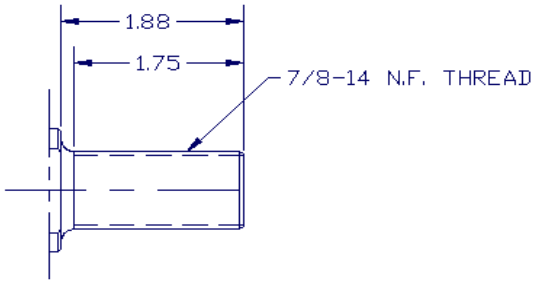

L

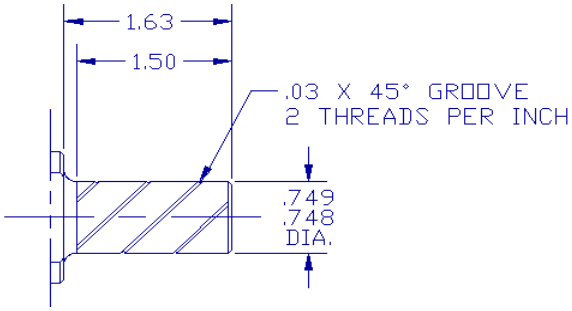

M

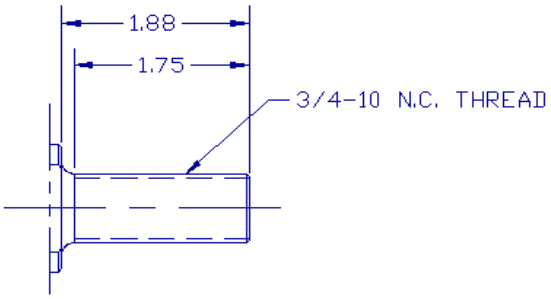

N

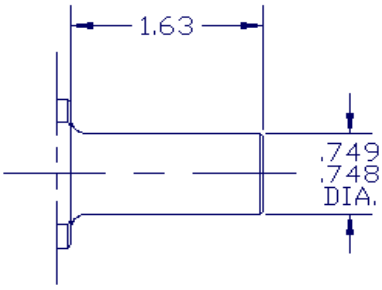

N+

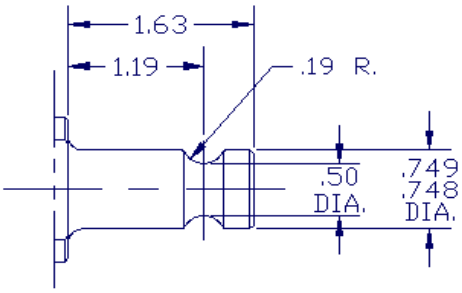

N6

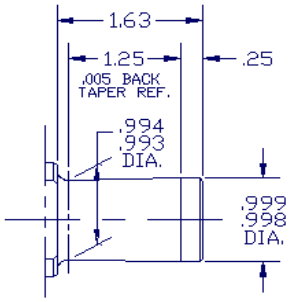

N6+

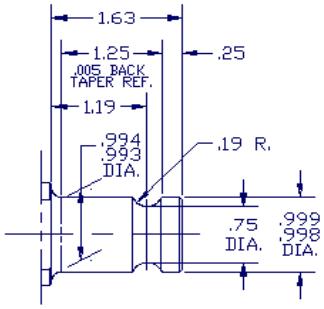

R

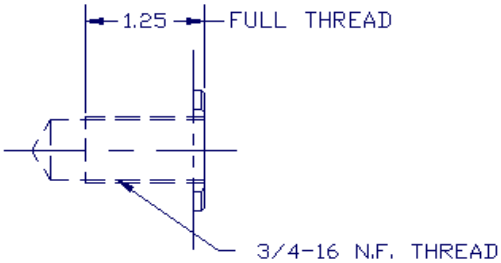

A MOUNT CYLINDERS (1.75" - 3.00" BORE)

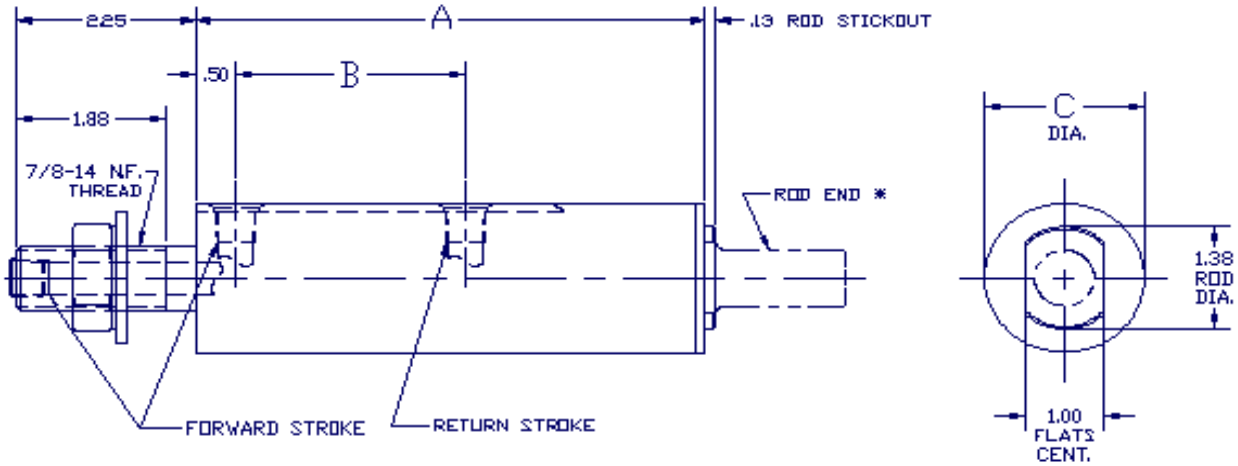

DUAL PISTON CYLINDERS						PISTON AREA	
MODEL NO.	STROKE	A	B	C		EXT.	RET.
AC-A-G-436-4*	1.00	5.38	2.38	2.00		4.36 SQ. IN.	1.96 SQ. IN.
AC-A-G-436-6*	1.50	6.38	2.88				
AC-A-G-436-8*	2.00	7.38	3.38				
AC-A-G-436-12*	3.00	9.38	4.38				
AC-A-G-436-16*	4.00	11.38	5.38				
AC-A-G-584-4*	1.00	5.38	2.38	2.25		5.84 SQ. IN.	2.70 SQ. IN.
AC-A-G-584-6*	1.50	6.38	2.88				
AC-A-G-584-8*	2.00	7.38	3.38				
AC-A-G-584-12*	3.00	9.38	4.38				
AC-A-G-584-16*	4.00	11.38	5.38				
AC-A-G-750-4*	1.00	5.38	2.38	2.50		7.50 SQ. IN.	3.53 SQ. IN.
AC-A-G-750-6*	1.50	6.38	2.88				
AC-A-G-750-8*	2.00	7.38	3.38				
AC-A-G-750-12*	3.00	9.38	4.38				
AC-A-G-750-16*	4.00	11.38	5.38				
AC-A-G-937-4*	1.00	5.38	2.38	2.75		9.37 SQ. IN.	4.46 SQ. IN.
AC-A-G-937-6*	1.50	6.38	2.88				
AC-A-G-937-8*	2.00	7.38	3.38				
AC-A-G-937-12*	3.00	9.38	4.38				
AC-A-G-937-16*	4.00	11.38	5.38				
AC-A-G-1143-4*	1.00	5.38	2.38	3.00		11.43 SQ. IN.	5.50 SQ. IN.
AC-A-G-1143-6*	1.50	6.38	2.88				
AC-A-G-1143-8*	2.00	7.38	3.38				
AC-A-G-1143-12*	3.00	9.38	4.38				
AC-A-G-1143-16*	4.00	11.38	5.38				
AC-A-G-1360-4*	1.00	5.38	2.38	3.25		13.60 SQ. IN.	6.63 SQ. IN.
AC-A-G-1360-6*	1.50	6.38	2.88				
AC-A-G-1360-8*	2.00	7.38	3.38				
AC-A-G-1360-12*	3.00	9.38	4.38				
AC-A-G-1360-16*	4.00	11.38	5.38				

TRIPLE PISTON CYLINDERS						PISTON AREA	
MODEL NO.	STROKE	A	B	C		EXT.	RET.
AC-A-G3-620-4*	1.00	7.38	2.38	2.00		6.20 SQ. IN.	1.96 SQ. IN.
AC-A-G3-620-6*	1.50	8.88	2.88				
AC-A-G3-620-8*	2.00	10.38	3.38				
AC-A-G3-620-12*	3.00	13.38	4.38				
AC-A-G3-620-16*	4.00	16.38	5.38				
AC-A-G3-840-4*	1.00	7.38	2.38	2.25		8.40 SQ. IN.	2.70 SQ. IN.
AC-A-G3-840-6*	1.50	8.88	2.88				
AC-A-G3-840-8*	2.00	10.38	3.38				
AC-A-G3-840-12*	3.00	13.38	4.38				
AC-A-G3-840-16*	4.00	16.38	5.38				
AC-A-G3-1087-4*	1.00	7.38	2.38	2.50		10.87 SQ. IN.	3.53 SQ. IN.
AC-A-G3-1087-6*	1.50	8.88	2.88				
AC-A-G3-1087-8*	2.00	10.38	3.38				
AC-A-G3-1087-12*	3.00	13.38	4.38				
AC-A-G3-1087-16*	4.00	16.38	5.38				
AC-A-G3-1370-4*	1.00	7.38	2.38	2.75		13.70 SQ. IN.	4.46 SQ. IN.
AC-A-G3-1370-6*	1.50	8.88	2.88				
AC-A-G3-1370-8*	2.00	10.38	3.38				
AC-A-G3-1370-12*	3.00	13.38	4.38				
AC-A-G3-1370-16*	4.00	16.38	5.38				
AC-A-G3-1680-4*	1.00	7.38	2.38	3.00		16.80 SQ. IN.	5.50 SQ. IN.
AC-A-G3-1680-6*	1.50	8.88	2.88				
AC-A-G3-1680-8*	2.00	10.38	3.38				
AC-A-G3-1680-12*	3.00	13.38	4.38				
AC-A-G3-1680-16*	4.00	16.38	5.38				
AC-A-G3-2010-4*	1.00	7.38	2.38	3.25		20.10 SQ. IN.	6.63 SQ. IN.
AC-A-G3-2010-6*	1.50	8.88	2.88				
AC-A-G3-2010-8*	2.00	10.38	3.38				
AC-A-G3-2010-12*	3.00	13.38	4.38				
AC-A-G3-2010-16*	4.00	16.38	5.38				

* ADD ROD END STYLE (SEE PAGE 1 FOR OPTIONS)

ADDITIONAL STROKE LENGTHS ARE AVAILABLE IN .50" INCREMENTS

ALL PORTS 1/4-18 STANDARD PIPE TAP

Advanced Cylinder Products, LLC

THE LEADER IN PNEUMATIC CYLINDERS

B MOUNT CYLINDERS (1.75" - 3.00" BORE)

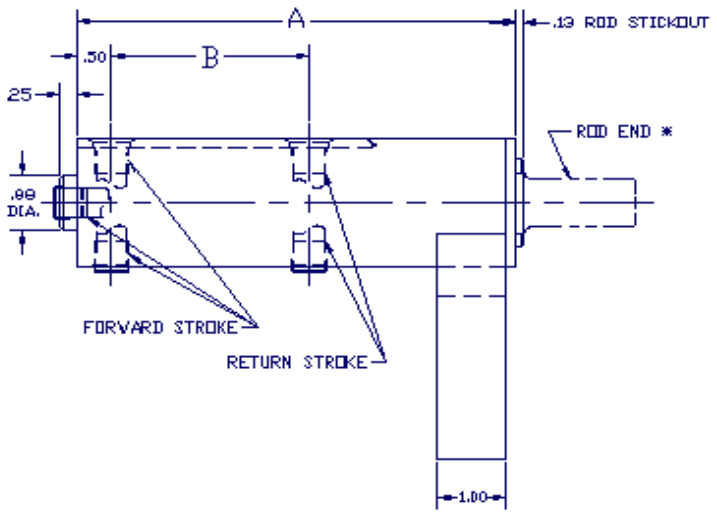

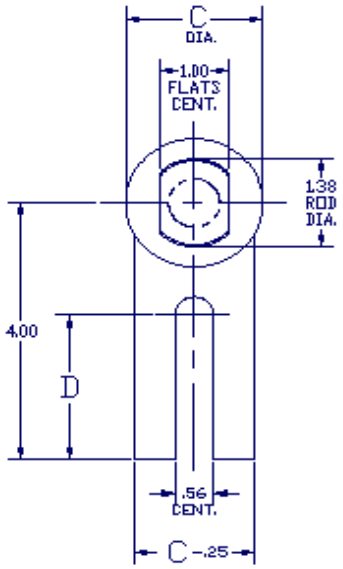

DUAL PISTON CYLINDERS						PISTON AREA	
MODEL NO.	STROKE	A	B	C	D	EXT.	RET.
AC-B-G-436-4*	1.00	5.38	2.38	2.00	2.25	4.36 SQ. IN.	1.96 SQ. IN.
AC-B-G-436-6*	1.50	6.38	2.88				
AC-B-G-436-8*	2.00	7.38	3.38				
AC-B-G-436-12*	3.00	9.38	4.38				
AC-B-G-436-16*	4.00	11.38	5.38				
AC-B-G-584-4*	1.00	5.38	2.38	2.25	2.25	5.84 SQ. IN.	2.70 SQ. IN.
AC-B-G-584-6*	1.50	6.38	2.88				
AC-B-G-584-8*	2.00	7.38	3.38				
AC-B-G-584-12*	3.00	9.38	4.38				
AC-B-G-584-16*	4.00	11.38	5.38				
AC-B-G-750-4*	1.00	5.38	2.38	2.50	2.25	7.50 SQ. IN.	3.53 SQ. IN.
AC-B-G-750-6*	1.50	6.38	2.88				
AC-B-G-750-8*	2.00	7.38	3.38				
AC-B-G-750-12*	3.00	9.38	4.38				
AC-B-G-750-16*	4.00	11.38	5.38				
AC-B-G-937-4*	1.00	5.38	2.38	2.75	2.00	9.37 SQ. IN.	4.46 SQ. IN.
AC-B-G-937-6*	1.50	6.38	2.88				
AC-B-G-937-8*	2.00	7.38	3.38				
AC-B-G-937-12*	3.00	9.38	4.38				
AC-B-G-937-16*	4.00	11.38	5.38				
AC-B-G-1143-4*	1.00	5.38	2.38	3.00	1.88	11.43 SQ. IN.	5.50 SQ. IN.
AC-B-G-1143-6*	1.50	6.38	2.88				
AC-B-G-1143-8*	2.00	7.38	3.38				
AC-B-G-1143-12*	3.00	9.38	4.38				
AC-B-G-1143-16*	4.00	11.38	5.38				
AC-B-G-1360-4*	1.00	5.38	2.38	3.25	1.75	13.60 SQ. IN.	6.63 SQ. IN.
AC-B-G-1360-6*	1.50	6.38	2.88				
AC-B-G-1360-8*	2.00	7.38	3.38				
AC-B-G-1360-12*	3.00	9.38	4.38				
AC-B-G-1360-16*	4.00	11.38	5.38				

TRIPLE PISTON CYLINDERS						PISTON AREA	
MODEL NO.	STROKE	A	B	C	D	EXT.	RET.
AC-B-G3-620-4*	1.00	7.38	2.38	2.00	2.25	6.20 SQ. IN.	1.96 SQ. IN.
AC-B-G3-620-6*	1.50	8.88	2.88				
AC-B-G3-620-8*	2.00	10.38	3.38				
AC-B-G3-620-12*	3.00	13.38	4.38				
AC-B-G3-620-16*	4.00	16.38	5.38				
AC-B-G3-840-4*	1.00	7.38	2.38	2.25	2.25	8.40 SQ. IN.	2.70 SQ. IN.
AC-B-G3-840-6*	1.50	8.88	2.88				
AC-B-G3-840-8*	2.00	10.38	3.38				
AC-B-G3-840-12*	3.00	13.38	4.38				
AC-B-G3-840-16*	4.00	16.38	5.38				
AC-B-G3-1087-4*	1.00	7.38	2.38	2.50	2.25	10.87 SQ. IN.	3.53 SQ. IN.
AC-B-G3-1087-6*	1.50	8.88	2.88				
AC-B-G3-1087-8*	2.00	10.38	3.38				
AC-B-G3-1087-12*	3.00	13.38	4.38				
AC-B-G3-1087-16*	4.00	16.38	5.38				
AC-B-G3-1370-4*	1.00	7.38	2.38	2.75	2.00	13.70 SQ. IN.	4.46 SQ. IN.
AC-B-G3-1370-6*	1.50	8.88	2.88				
AC-B-G3-1370-8*	2.00	10.38	3.38				
AC-B-G3-1370-12*	3.00	13.38	4.38				
AC-B-G3-1370-16*	4.00	16.38	5.38				
AC-B-G3-1680-4*	1.00	7.38	2.38	3.00	1.88	16.80 SQ. IN.	5.50 SQ. IN.
AC-B-G3-1680-6*	1.50	8.88	2.88				
AC-B-G3-1680-8*	2.00	10.38	3.38				
AC-B-G3-1680-12*	3.00	13.38	4.38				
AC-B-G3-1680-16*	4.00	16.38	5.38				
AC-B-G3-2010-4*	1.00	7.38	2.38	3.25	1.75	20.10 SQ. IN.	6.63 SQ. IN.
AC-B-G3-2010-6*	1.50	8.88	2.88				
AC-B-G3-2010-8*	2.00	10.38	3.38				
AC-B-G3-2010-12*	3.00	13.38	4.38				
AC-B-G3-2010-16*	4.00	16.38	5.38				

* ADD ROD END STYLE (SEE PAGE 1 FOR OPTIONS)

ADDITIONAL STROKE LENGTHS ARE AVAILABLE IN .50" INCREMENTS

ALL PORTS 1/4-18 STANDARD PIPE TAP

Advanced Cylinder Products, LLC

THE LEADER IN PNEUMATIC CYLINDERS

B3/4 MOUNT CYLINDERS (1.75" - 3.00" BORE)

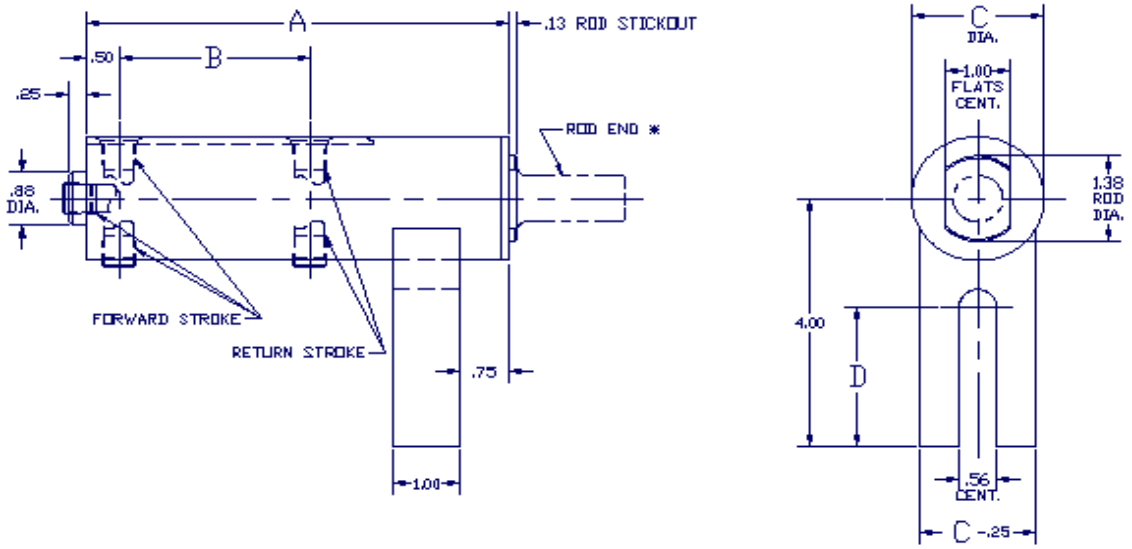

DUAL PISTON CYLINDERS						PISTON AREA	
MODEL NO.	STROKE	A	B	C	D	EXT.	RET.
AC-B3/4-G-436-4*	1.00	5.38	2.38	2.00	2.25	4.36 SQ. IN.	1.96 SQ. IN.
AC-B3/4-G-436-6*	1.50	6.38	2.88				
AC-B3/4-G-436-8*	2.00	7.38	3.38				
AC-B3/4-G-436-12*	3.00	9.38	4.38				
AC-B3/4-G-436-16*	4.00	11.38	5.38				
AC-B3/4-G-584-4*	1.00	5.38	2.38	2.25	2.25	5.84 SQ. IN.	2.70 SQ. IN.
AC-B3/4-G-584-6*	1.50	6.38	2.88				
AC-B3/4-G-584-8*	2.00	7.38	3.38				
AC-B3/4-G-584-12*	3.00	9.38	4.38				
AC-B3/4-G-584-16*	4.00	11.38	5.38				
AC-B3/4-G-750-4*	1.00	5.38	2.38	2.50	2.25	7.50 SQ. IN.	3.53 SQ. IN.
AC-B3/4-G-750-6*	1.50	6.38	2.88				
AC-B3/4-G-750-8*	2.00	7.38	3.38				
AC-B3/4-G-750-12*	3.00	9.38	4.38				
AC-B3/4-G-750-16*	4.00	11.38	5.38				
AC-B3/4-G-937-4*	1.00	5.38	2.38	2.75	2.00	9.37 SQ. IN.	4.46 SQ. IN.
AC-B3/4-G-937-6*	1.50	6.38	2.88				
AC-B3/4-G-937-8*	2.00	7.38	3.38				
AC-B3/4-G-937-12*	3.00	9.38	4.38				
AC-B3/4-G-937-16*	4.00	11.38	5.38				
AC-B3/4-G-1143-4*	1.00	5.38	2.38	3.00	1.88	11.43 SQ. IN.	5.50 SQ. IN.
AC-B3/4-G-1143-6*	1.50	6.38	2.88				
AC-B3/4-G-1143-8*	2.00	7.38	3.38				
AC-B3/4-G-1143-12*	3.00	9.38	4.38				
AC-B3/4-G-1143-16*	4.00	11.38	5.38				
AC-B3/4-G-1360-4*	1.00	5.38	2.38	3.25	1.75	13.60 SQ. IN.	6.63 SQ. IN.
AC-B3/4-G-1360-6*	1.50	6.38	2.88				
AC-B3/4-G-1360-8*	2.00	7.38	3.38				
AC-B3/4-G-1360-12*	3.00	9.38	4.38				
AC-B3/4-G-1360-16*	4.00	11.38	5.38				

TRIPLE PISTON CYLINDERS						PISTON AREA	
MODEL NO.	STROKE	A	B	C	D	EXT.	RET.
AC-B3/4-G3-620-4*	1.00	7.38	2.38	2.00	2.25	6.20 SQ. IN.	1.96 SQ. IN.
AC-B3/4-G3-620-6*	1.50	8.88	2.88				
AC-B3/4-G3-620-8*	2.00	10.38	3.38				
AC-B3/4-G3-620-12*	3.00	13.38	4.38				
AC-B3/4-G3-620-16*	4.00	16.38	5.38				
AC-B3/4-G3-840-4*	1.00	7.38	2.38	2.25	2.25	8.40 SQ. IN.	2.70 SQ. IN.
AC-B3/4-G3-840-6*	1.50	8.88	2.88				
AC-B3/4-G3-840-8*	2.00	10.38	3.38				
AC-B3/4-G3-840-12*	3.00	13.38	4.38				
AC-B3/4-G3-840-16*	4.00	16.38	5.38				
AC-B3/4-G3-1087-4*	1.00	7.38	2.38	2.50	2.25	10.87 SQ. IN.	3.53 SQ. IN.
AC-B3/4-G3-1087-6*	1.50	8.88	2.88				
AC-B3/4-G3-1087-8*	2.00	10.38	3.38				
AC-B3/4-G3-1087-12*	3.00	13.38	4.38				
AC-B3/4-G3-1087-16*	4.00	16.38	5.38				
AC-B3/4-G3-1370-4*	1.00	7.38	2.38	2.75	2.00	13.70 SQ. IN.	4.46 SQ. IN.
AC-B3/4-G3-1370-6*	1.50	8.88	2.88				
AC-B3/4-G3-1370-8*	2.00	10.38	3.38				
AC-B3/4-G3-1370-12*	3.00	13.38	4.38				
AC-B3/4-G3-1370-16*	4.00	16.38	5.38				
AC-B3/4-G3-1680-4*	1.00	7.38	2.38	3.00	1.88	16.80 SQ. IN.	5.50 SQ. IN.
AC-B3/4-G3-1680-6*	1.50	8.88	2.88				
AC-B3/4-G3-1680-8*	2.00	10.38	3.38				
AC-B3/4-G3-1680-12*	3.00	13.38	4.38				
AC-B3/4-G3-1680-16*	4.00	16.38	5.38				
AC-B3/4-G3-2010-4*	1.00	7.38	2.38	3.25	1.75	20.10 SQ. IN.	6.63 SQ. IN.
AC-B3/4-G3-2010-6*	1.50	8.88	2.88				
AC-B3/4-G3-2010-8*	2.00	10.38	3.38				
AC-B3/4-G3-2010-12*	3.00	13.38	4.38				
AC-B3/4-G3-2010-16*	4.00	16.38	5.38				

* ADD ROD END STYLE (SEE PAGE 1 FOR OPTIONS)

ADDITIONAL STROKE LENGTHS ARE AVAILABLE IN .50" INCREMENTS

ALL PORTS 1/4-18 STANDARD PIPE TAP

Advanced Cylinder Products, LLC

THE LEADER IN PNEUMATIC CYLINDERS

C MOUNT CYLINDERS (1.75" - 3.00" BORE)

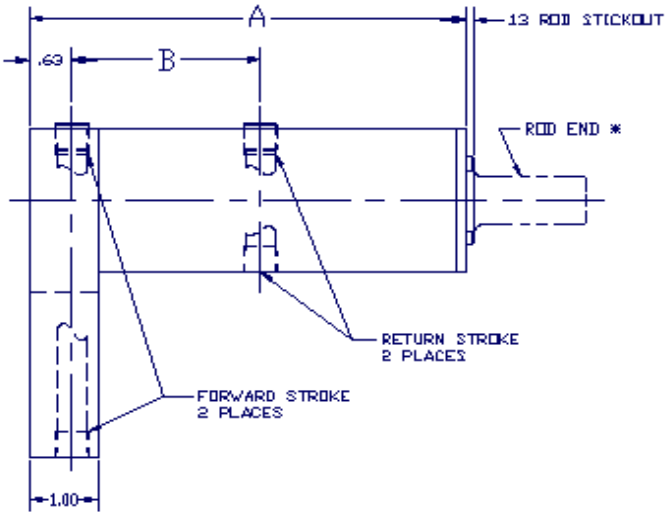

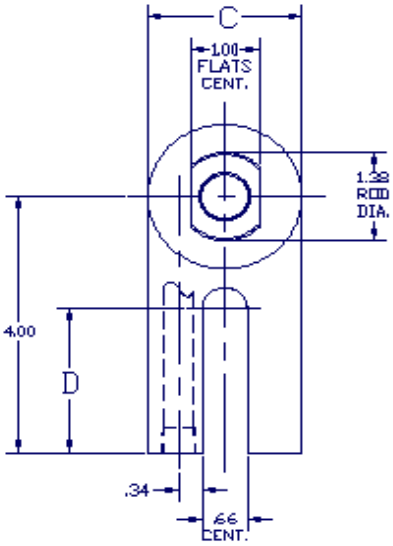

DUAL PISTON CYLINDERS						PISTON AREA	
MODEL NO.	STROKE	A	B	C	D	EXT.	RET.
AC-C-G-436-4*	1.00	5.38	2.25	2.00	2.25	4.36 SQ. IN.	1.96 SQ. IN.
AC-C-G-436-6*	1.50	6.38	2.75				
AC-C-G-436-8*	2.00	7.38	3.25				
AC-C-G-436-12*	3.00	9.38	4.25				
AC-C-G-436-16*	4.00	11.38	5.25				
AC-C-G-584-4*	1.00	5.38	2.25	2.25	2.25	5.84 SQ. IN.	2.70 SQ. IN.
AC-C-G-584-6*	1.50	6.38	2.75				
AC-C-G-584-8*	2.00	7.38	3.25				
AC-C-G-584-12*	3.00	9.38	4.25				
AC-C-G-584-16*	4.00	11.38	5.25				
AC-C-G-750-4*	1.00	5.38	2.25	2.50	2.25	7.50 SQ. IN.	3.53 SQ. IN.
AC-C-G-750-6*	1.50	6.38	2.75				
AC-C-G-750-8*	2.00	7.38	3.25				
AC-C-G-750-12*	3.00	9.38	4.25				
AC-C-G-750-16*	4.00	11.38	5.25				
AC-C-G-937-4*	1.00	5.38	2.25	2.75	2.00	9.37 SQ. IN.	4.46 SQ. IN.
AC-C-G-937-6*	1.50	6.38	2.75				
AC-C-G-937-8*	2.00	7.38	3.25				
AC-C-G-937-12*	3.00	9.38	4.25				
AC-C-G-937-16*	4.00	11.38	5.25				
AC-C-G-1143-4*	1.00	5.38	2.25	3.00	1.88	11.43 SQ. IN.	5.50 SQ. IN.
AC-C-G-1143-6*	1.50	6.38	2.75				
AC-C-G-1143-8*	2.00	7.38	3.25				
AC-C-G-1143-12*	3.00	9.38	4.25				
AC-C-G-1143-16*	4.00	11.38	5.25				
AC-C-G-1360-4*	1.00	5.38	2.25	3.25	1.75	13.60 SQ. IN.	6.63 SQ. IN.
AC-C-G-1360-6*	1.50	6.38	2.75				
AC-C-G-1360-8*	2.00	7.38	3.25				
AC-C-G-1360-12*	3.00	9.38	4.25				
AC-C-G-1360-16*	4.00	11.38	5.25				

TRIPLE PISTON CYLINDERS						PISTON AREA	
MODEL NO.	STROKE	A	B	C	D	EXT.	RET.
AC-C-G3-620-4*	1.00	7.38	2.25	2.00	2.25	6.20 SQ. IN.	1.96 SQ. IN.
AC-C-G3-620-6*	1.50	8.88	2.75				
AC-C-G3-620-8*	2.00	10.38	3.25				
AC-C-G3-620-12*	3.00	13.38	4.25				
AC-C-G3-620-16*	4.00	16.38	5.25				
AC-C-G3-840-4*	1.00	7.38	2.25	2.25	2.25	8.40 SQ. IN.	2.70 SQ. IN.
AC-C-G3-840-6*	1.50	8.88	2.75				
AC-C-G3-840-8*	2.00	10.38	3.25				
AC-C-G3-840-12*	3.00	13.38	4.25				
AC-C-G3-840-16*	4.00	16.38	5.25				
AC-C-G3-1087-4*	1.00	7.38	2.25	2.50	2.25	10.87 SQ. IN.	3.53 SQ. IN.
AC-C-G3-1087-6*	1.50	8.88	2.75				
AC-C-G3-1087-8*	2.00	10.38	3.25				
AC-C-G3-1087-12*	3.00	13.38	4.25				
AC-C-G3-1087-16*	4.00	16.38	5.25				
AC-C-G3-1370-4*	1.00	7.38	2.25	2.75	2.00	13.70 SQ. IN.	4.46 SQ. IN.
AC-C-G3-1370-6*	1.50	8.88	2.75				
AC-C-G3-1370-8*	2.00	10.38	3.25				
AC-C-G3-1370-12*	3.00	13.38	4.25				
AC-C-G3-1370-16*	4.00	16.38	5.25				
AC-C-G3-1680-4*	1.00	7.38	2.25	3.00	1.88	16.80 SQ. IN.	5.50 SQ. IN.
AC-C-G3-1680-6*	1.50	8.88	2.75				
AC-C-G3-1680-8*	2.00	10.38	3.25				
AC-C-G3-1680-12*	3.00	13.38	4.25				
AC-C-G3-1680-16*	4.00	16.38	5.25				
AC-C-G3-2010-4*	1.00	7.38	2.25	3.25	1.75	20.10 SQ. IN.	6.63 SQ. IN.
AC-C-G3-2010-6*	1.50	8.88	2.75				
AC-C-G3-2010-8*	2.00	10.38	3.25				
AC-C-G3-2010-12*	3.00	13.38	4.25				
AC-C-G3-2010-16*	4.00	16.38	5.25				

* ADD ROD END STYLE (SEE PAGE 1 FOR OPTIONS)

ADDITIONAL STROKE LENGTHS ARE AVAILABLE IN .50" INCREMENTS

ALL PORTS 1/4-18 STANDARD PIPE TAP

Advanced Cylinder Products, LLC

THE LEADER IN PNEUMATIC CYLINDERS

F MOUNT CYLINDERS (1.75" - 3.00" BORE)

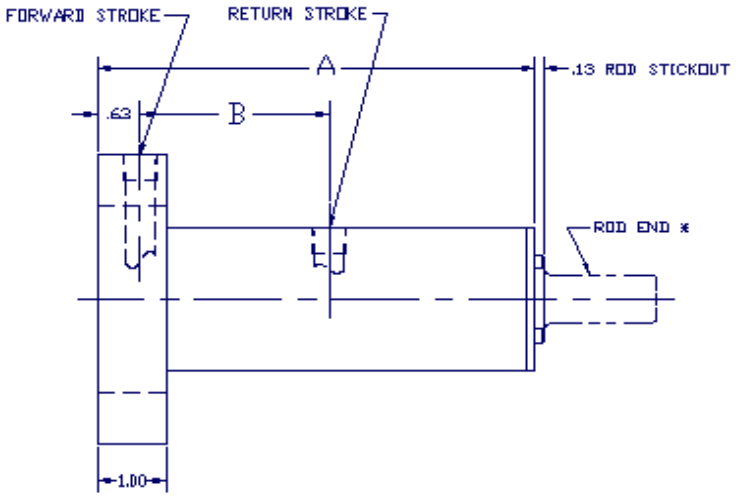

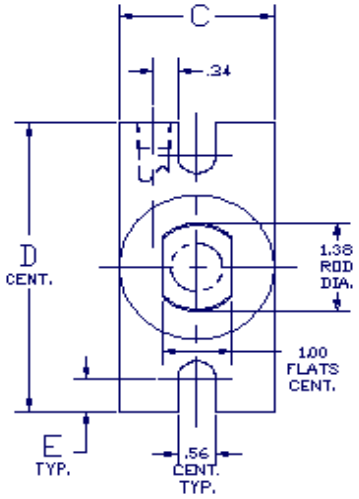

DUAL PISTON CYLINDERS						PISTON AREA	
MODEL NO.	STROKE	A	B	C	D & E	EXT.	RET.
AC-F-G-436-4*	1.00	5.38	2.25		D		
AC-F-G-436-6*	1.50	6.38	2.75		4.50	4.36	1.96
AC-F-G-436-8*	2.00	7.38	3.25	2.00		SQ. IN.	SQ. IN.
AC-F-G-436-12*	3.00	9.38	4.25		E		
AC-F-G-436-16*	4.00	11.38	5.25		.50		
AC-F-G-584-4*	1.00	5.38	2.25		D		
AC-F-G-584-6*	1.50	6.38	2.75		4.50	5.84	2.70
AC-F-G-584-8*	2.00	7.38	3.25	2.25		SQ. IN.	SQ. IN.
AC-F-G-584-12*	3.00	9.38	4.25		E		
AC-F-G-584-16*	4.00	11.38	5.25		.50		
AC-F-G-750-4*	1.00	5.38	2.25		D		
AC-F-G-750-6*	1.50	6.38	2.75		5.50	7.50	3.53
AC-F-G-750-8*	2.00	7.38	3.25	2.50		SQ. IN.	SQ. IN.
AC-F-G-750-12*	3.00	9.38	4.25		E		
AC-F-G-750-16*	4.00	11.38	5.25		.75		
AC-F-G-937-4*	1.00	5.38	2.25		D		
AC-F-G-937-6*	1.50	6.38	2.75		5.50	9.37	4.46
AC-F-G-937-8*	2.00	7.38	3.25	2.75		SQ. IN.	SQ. IN.
AC-F-G-937-12*	3.00	9.38	4.25		E		
AC-F-G-937-16*	4.00	11.38	5.25		.75		
AC-F-G-1143-4*	1.00	5.38	2.25		D		
AC-F-G-1143-6*	1.50	6.38	2.75		5.75	11.43	5.50
AC-F-G-1143-8*	2.00	7.38	3.25	3.00		SQ. IN.	SQ. IN.
AC-F-G-1143-12*	3.00	9.38	4.25		E		
AC-F-G-1143-16*	4.00	11.38	5.25		.69		
AC-F-G-1360-4*	1.00	5.38	2.25		D		
AC-F-G-1360-6*	1.50	6.38	2.75		5,75	13.60	6.63
AC-F-G-1360-8*	2.00	7.38	3.25	3.25		SQ. IN.	SQ. IN.
AC-F-G-1360-12*	3.00	9.38	4.25		E		
AC-F-G-1360-16*	4.00	11.38	5.25		.69		

TRIPLE PISTON CYLINDERS						PISTON AREA	
MODEL NO.	STROKE	A	B	C	D & E	EXT.	RET.
AC-F-G3-620-4*	1.00	7.38	2.25		D		
AC-F-G3-620-6*	1.50	8.88	2.75		4.50	6.20	1.96
AC-F-G3-620-8*	2.00	10.38	3.25	2.00		SQ. IN.	SQ. IN.
AC-F-G3-620-12*	3.00	13.38	4.25		E		
AC-F-G3-620-16*	4.00	16.38	5.25		.50		
AC-F-G3-840-4*	1.00	7.38	2.25		D		
AC-F-G3-840-6*	1.50	8.88	2.75		4.50	8.40	2.70
AC-F-G3-840-8*	2.00	10.38	3.25	2.25		SQ. IN.	SQ. IN.
AC-F-G3-840-12*	3.00	13.38	4.25		E		
AC-F-G3-840-16*	4.00	16.38	5.25		.50		
AC-F-G3-1087-4*	1.00	7.38	2.25		D		
AC-F-G3-1087-6*	1.50	8.88	2.75		5.50	10.87	3.53
AC-F-G3-1087-8*	2.00	10.38	3.25	2.50		SQ. IN.	SQ. IN.
AC-F-G3-1087-12*	3.00	13.38	4.25		E		
AC-F-G3-1087-16*	4.00	16.38	5.25		.75		
AC-F-G3-1370-4*	1.00	7.38	2.25		D		
AC-F-G3-1370-6*	1.50	8.88	2.75		5.50	13.70	4.46
AC-F-G3-1370-8*	2.00	10.38	3.25	2.75		SQ. IN.	SQ. IN.
AC-F-G3-1370-12*	3.00	13.38	4.25		E		
AC-F-G3-1370-16*	4.00	16.38	5.25		.75		
AC-F-G3-1680-4*	1.00	7.38	2.25		D		
AC-F-G3-1680-6*	1.50	8.88	2.75		5.75	16.80	5.50
AC-F-G3-1680-8*	2.00	10.38	3.25	3.00		SQ. IN.	SQ. IN.
AC-F-G3-1680-12*	3.00	13.38	4.25		E		
AC-F-G3-1680-16*	4.00	16.38	5.25		.69		
AC-F-G3-2010-4*	1.00	7.38	2.25		D		
AC-F-G3-2010-6*	1.50	8.88	2.75		5,75	20.10	6.63
AC-F-G3-2010-8*	2.00	10.38	3.25	3.25		SQ. IN.	SQ. IN.
AC-F-G3-2010-12*	3.00	13.38	4.25		E		
AC-F-G3-2010-16*	4.00	16.38	5.25		.69		

* ADD ROD END STYLE (SEE PAGE 1 FOR OPTIONS)

ADDITIONAL STROKE LENGTHS ARE AVAILABLE IN .50" INCREMENTS

ALL PORTS 1/4-18 STANDARD PIPE TAP

Advanced Cylinder Products, LLC

THE LEADER IN PNEUMATIC CYLINDERS

H3 MOUNT CYLINDERS (1.75" - 3.00" BORE)

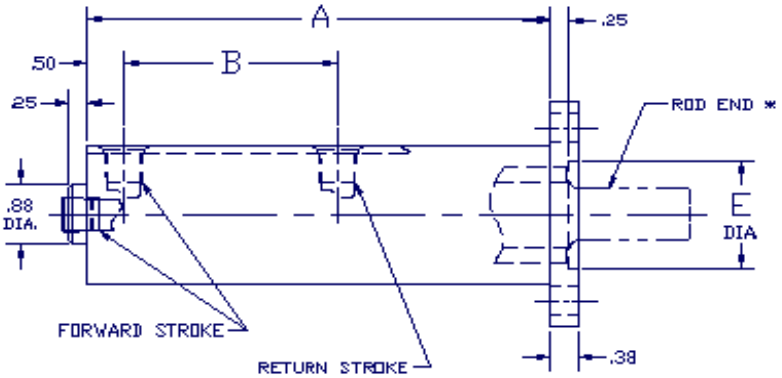

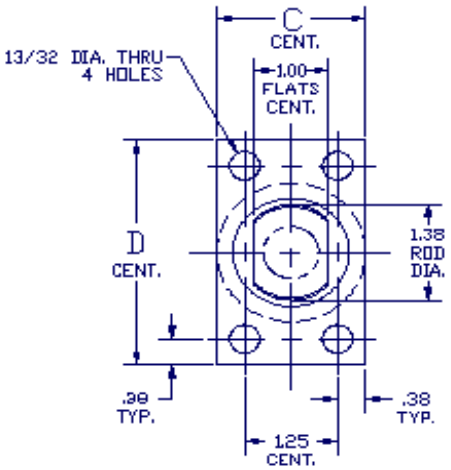

DUAL PISTON CYLINDERS						PISTON AREA	
MODEL NO.	STROKE	A	B	C	D & E	EXT.	RET.
AC-H3-G-436-4*	1.00	5.25	2.38		D		
AC-H3-G-436-6*	1.50	6.25	2.88		3.25	4.36	1.96
AC-H3-G-436-8*	2.00	7.25	3.38	2.00		SQ. IN.	SQ. IN.
AC-H3-G-436-12*	3.00	9.25	4.38		E		
AC-H3-G-436-16*	4.00	11.25	5.38		1.56		
AC-H3-G-584-4*	1.00	5.25	2.38		D		
AC-H3-G-584-6*	1.50	6.25	2.88		3.50	5.84	2.70
AC-H3-G-584-8*	2.00	7.25	3.38	2.25		SQ. IN.	SQ. IN.
AC-H3-G-584-12*	3.00	9.25	4.38		E		
AC-H3-G-584-16*	4.00	11.25	5.38		2.00		
AC-H3-G-750-4*	1.00	5.25	2.38		D		
AC-H3-G-750-6*	1.50	6.25	2.88		3.75	7.50	3.53
AC-H3-G-750-8*	2.00	7.25	3.38	2.50		SQ. IN.	SQ. IN.
AC-H3-G-750-12*	3.00	9.25	4.38		E		
AC-H3-G-750-16*	4.00	11.25	5.38		2.00		
AC-H3-G-937-4*	1.00	5.25	2.38		D		
AC-H3-G-937-6*	1.50	6.25	2.88		4.00	9.37	4.46
AC-H3-G-937-8*	2.00	7.25	3.38	2.75		SQ. IN.	SQ. IN.
AC-H3-G-937-12*	3.00	9.25	4.38		E		
AC-H3-G-937-16*	4.00	11.25	5.38		2.00		
AC-H3-G-1143-4*	1.00	5.25	2.38		D		
AC-H3-G-1143-6*	1.50	6.25	2.88		4.25	11.43	5.50
AC-H3-G-1143-8*	2.00	7.25	3.38	3.00		SQ. IN.	SQ. IN.
AC-H3-G-1143-12*	3.00	9.25	4.38		E		
AC-H3-G-1143-16*	4.00	11.25	5.38		2.00		
AC-H3-G-1360-4*	1.00	5.25	2.38		D		
AC-H3-G-1360-6*	1.50	6.25	2.88		4.50	13.60	6.63
AC-H3-G-1360-8*	2.00	7.25	3.38	3.25		SQ. IN.	SQ. IN.
AC-H3-G-1360-12*	3.00	9.25	4.38		E		
AC-H3-G-1360-16*	4.00	11.25	5.38		2.00		

TRIPLE PISTON CYLINDERS						PISTON AREA	
MODEL NO.	STROKE	A	B	C	D & E	EXT.	RET.
AC-H3-G3-620-4*	1.00	7.25	2.38		D		
AC-H3-G3-620-6*	1.50	8.75	2.88		3.25	6.20	1.96
AC-H3-G3-620-8*	2.00	10.25	3.38	2.00		SQ. IN.	SQ. IN.
AC-H3-G3-620-12*	3.00	13.25	4.38		E		
AC-H3-G3-620-16*	4.00	16.25	5.38		1.56		
AC-H3-G3-840-4*	1.00	7.25	2.38		D		
AC-H3-G3-840-6*	1.50	8.75	2.88		3.50	8.40	2.70
AC-H3-G3-840-8*	2.00	10.25	3.38	2.25		SQ. IN.	SQ. IN.
AC-H3-G3-840-12*	3.00	13.25	4.38		E		
AC-H3-G3-840-16*	4.00	16.25	5.38		2.00		
AC-H3-G3-1087-4*	1.00	7.25	2.38		D		
AC-H3-G3-1087-6*	1.50	8.75	2.88		3.75	10.87	3.53
AC-H3-G3-1087-8*	2.00	10.25	3.38	2.50		SQ. IN.	SQ. IN.
AC-H3-G3-1087-12*	3.00	13.25	4.38		E		
AC-H3-G3-1087-16*	4.00	16.25	5.38		2.00		
AC-H3-G3-1370-4*	1.00	7.25	2.38		D		
AC-H3-G3-1370-6*	1.50	8.75	2.88		4.00	13.70	4.46
AC-H3-G3-1370-8*	2.00	10.25	3.38	2.75		SQ. IN.	SQ. IN.
AC-H3-G3-1370-12*	3.00	13.25	4.38		E		
AC-H3-G3-1370-16*	4.00	16.25	5.38		2.00		
AC-H3-G3-1680-4*	1.00	7.25	2.38		D		
AC-H3-G3-1680-6*	1.50	8.75	2.88		4.25	16.80	5.50
AC-H3-G3-1680-8*	2.00	10.25	3.38	3.00		SQ. IN.	SQ. IN.
AC-H3-G3-1680-12*	3.00	13.25	4.38		E		
AC-H3-G3-1680-16*	4.00	16.25	5.38		2.00		
AC-H3-G3-2010-4*	1.00	7.25	2.38		D		
AC-H3-G3-2010-6*	1.50	8.75	2.88		4.50	20.10	6.63
AC-H3-G3-2010-8*	2.00	10.25	3.38	3.25		SQ. IN.	SQ. IN.
AC-H3-G3-2010-12*	3.00	13.25	4.38		E		
AC-H3-G3-2010-16*	4.00	16.25	5.38		2.00		

* ADD ROD END STYLE (SEE PAGE 1 FOR OPTIONS)

ADDITIONAL STROKE LENGTHS ARE AVAILABLE IN .50" INCREMENTS

ALL PORTS 1/4-18 STANDARD PIPE TAP

Advanced Cylinder Products, LLC

THE LEADER IN PNEUMATIC CYLINDERS

J MOUNT CYLINDERS (1.75" - 3.00" BORE)

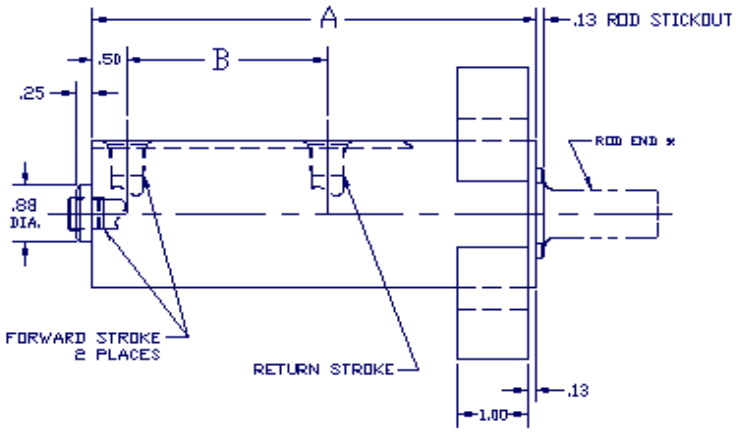

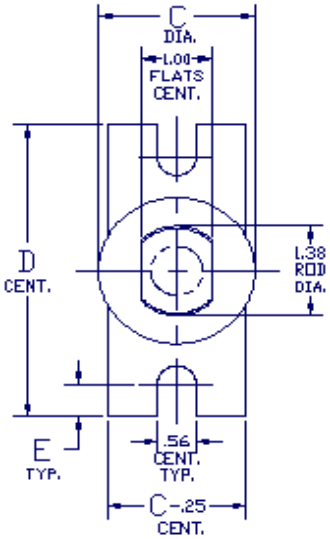

DUAL PISTON CYLINDERS						PISTON AREA	
MODEL NO.	STROKE	A	B	C	D & E	EXT.	RET.
AC-J-G-436-4*	1.00	5.38	2.38		D		
AC-J-G-436-6*	1.50	6.38	2.88		4.50	4.36	1.96
AC-J-G-436-8*	2.00	7.38	3.38	2.00		SQ. IN.	SQ. IN.
AC-J-G-436-12*	3.00	9.38	4.38		E		
AC-J-G-436-16*	4.00	11.38	5.38		.50		
AC-J-G-584-4*	1.00	5.38	2.38		D		
AC-J-G-584-6*	1.50	6.38	2.88		4.50	5.84	2.70
AC-J-G-584-8*	2.00	7.38	3.38	2.25		SQ. IN.	SQ. IN.
AC-J-G-584-12*	3.00	9.38	4.38		E		
AC-J-G-584-16*	4.00	11.38	5.38		.50		
AC-J-G-750-4*	1.00	5.38	2.38		D		
AC-J-G-750-6*	1.50	6.38	2.88		5.50	7.50	3.53
AC-J-G-750-8*	2.00	7.38	3.38	2.50		SQ. IN.	SQ. IN.
AC-J-G-750-12*	3.00	9.38	4.38		E		
AC-J-G-750-16*	4.00	11.38	5.38		.75		
AC-J-G-937-4*	1.00	5.38	2.38		D		
AC-J-G-937-6*	1.50	6.38	2.88		5.50	9.37	4.46
AC-J-G-937-8*	2.00	7.38	3.38	2.75		SQ. IN.	SQ. IN.
AC-J-G-937-12*	3.00	9.38	4.38		E		
AC-J-G-937-16*	4.00	11.38	5.38		.75		
AC-J-G-1143-4*	1.00	5.38	2.38		D		
AC-J-G-1143-6*	1.50	6.38	2.88		5.75	11.43	5.50
AC-J-G-1143-8*	2.00	7.38	3.38	3.00		SQ. IN.	SQ. IN.
AC-J-G-1143-12*	3.00	9.38	4.38		E		
AC-J-G-1143-16*	4.00	11.38	5.38		.69		
AC-J-G-1360-4*	1.00	5.38	2.38		D		
AC-J-G-1360-6*	1.50	6.38	2.88		5.75	13.60	6.63
AC-J-G-1360-8*	2.00	7.38	3.38	3.25		SQ. IN.	SQ. IN.
AC-J-G-1360-12*	3.00	9.38	4.38		E		
AC-J-G-1360-16*	4.00	11.38	5.38		.62		

TRIPLE PISTON CYLINDERS						PISTON AREA	
MODEL NO.	STROKE	A	B	C	D & E	EXT.	RET.
AC-J-G3-620-4*	1.00	7.38	2.38		D		
AC-J-G3-620-6*	1.50	8.88	2.88		4.50	6.20	1.96
AC-J-G3-620-8*	2.00	10.38	3.38	2.00		SQ. IN.	SQ. IN.
AC-J-G3-620-12*	3.00	13.38	4.38		E		
AC-J-G3-620-16*	4.00	16.38	5.38		.50		
AC-J-G3-840-4*	1.00	7.38	2.38		D		
AC-J-G3-840-6*	1.50	8.88	2.88		4.50	8.40	2.70
AC-J-G3-840-8*	2.00	10.38	3.38	2.25		SQ. IN.	SQ. IN.
AC-J-G3-840-12*	3.00	13.38	4.38		E		
AC-J-G3-840-16*	4.00	16.38	5.38		.50		
AC-J-G3-1087-4*	1.00	7.38	2.38		D		
AC-J-G3-1087-6*	1.50	8.88	2.88		5.50	10.87	3.53
AC-J-G3-1087-8*	2.00	10.38	3.38	2.50		SQ. IN.	SQ. IN.
AC-J-G3-1087-12*	3.00	13.38	4.38		E		
AC-J-G3-1087-16*	4.00	16.38	5.38		.75		
AC-J-G3-1370-4*	1.00	7.38	2.38		D		
AC-J-G3-1370-6*	1.50	8.88	2.88		5.50	13.70	4.46
AC-J-G3-1370-8*	2.00	10.38	3.38	2.75		SQ. IN.	SQ. IN.
AC-J-G3-1370-12*	3.00	13.38	4.38		E		
AC-J-G3-1370-16*	4.00	16.38	5.38		.75		
AC-J-G3-1680-4*	1.00	7.38	2.38		D		
AC-J-G3-1680-6*	1.50	8.88	2.88		5.75	16.80	5.50
AC-J-G3-1680-8*	2.00	10.38	3.38	3.00		SQ. IN.	SQ. IN.
AC-J-G3-1680-12*	3.00	13.38	4.38		E		
AC-J-G3-1680-16*	4.00	16.38	5.38		.69		
AC-J-G3-2010-4*	1.00	7.38	2.38		D		
AC-J-G3-2010-6*	1.50	8.88	2.88		5.75	20.10	6.63
AC-J-G3-2010-8*	2.00	10.38	3.38	3.25		SQ. IN.	SQ. IN.
AC-J-G3-2010-12*	3.00	13.38	4.38		E		
AC-J-G3-2010-16*	4.00	16.38	5.38		.62		

* ADD ROD END STYLE (SEE PAGE 1 FOR OPTIONS)

ADDITIONAL STROKE LENGTHS ARE AVAILABLE IN .50" INCREMENTS

ALL PORTS 1/4-18 STANDARD PIPE TAP

Advanced Cylinder Products, LLC

THE LEADER IN PNEUMATIC CYLINDERS

J3/4 MOUNT CYLINDERS (1.75" - 3.00" BORE)

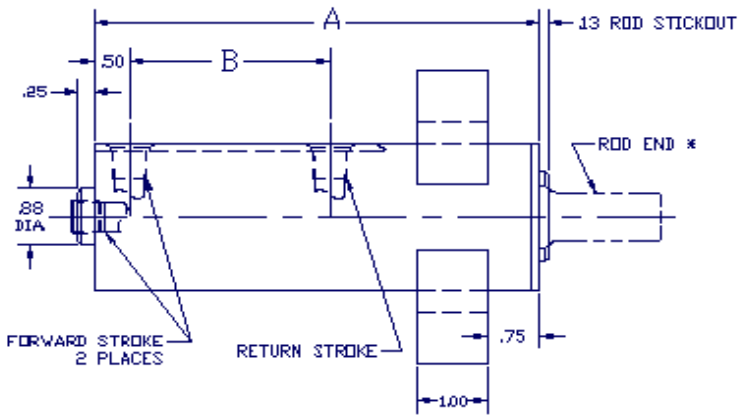

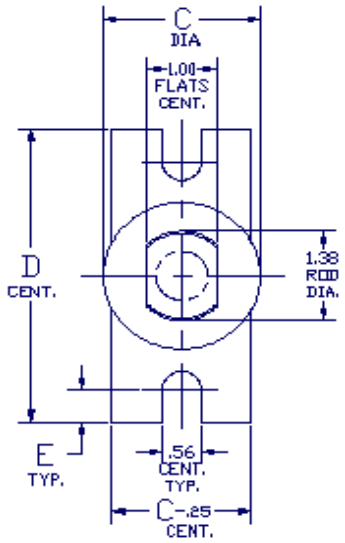

DUAL PISTON CYLINDERS						PISTON AREA	
MODEL NO.	STROKE	A	B	C	D & E	EXT.	RET.
AC-J3/4-G-436-4*	1.00	5.38	2.38		D		
AC-J3/4-G-436-6*	1.50	6.38	2.88		4.50	4.36	1.96
AC-J3/4-G-436-8*	2.00	7.38	3.38	2.00		SQ. IN.	SQ. IN.
AC-J3/4-G-436-12*	3.00	9.38	4.38		E		
AC-J3/4-G-436-16*	4.00	11.38	5.38		.50		
AC-J3/4-G-584-4*	1.00	5.38	2.38		D		
AC-J3/4-G-584-6*	1.50	6.38	2.88		4.50	5.84	2.70
AC-J3/4-G-584-8*	2.00	7.38	3.38	2.25		SQ. IN.	SQ. IN.
AC-J3/4-G-584-12*	3.00	9.38	4.38		E		
AC-J3/4-G-584-16*	4.00	11.38	5.38		.50		
AC-J3/4-G-750-4*	1.00	5.38	2.38		D		
AC-J3/4-G-750-6*	1.50	6.38	2.88		5.50	7.50	3.53
AC-J3/4-G-750-8*	2.00	7.38	3.38	2.50		SQ. IN.	SQ. IN.
AC-J3/4-G-750-12*	3.00	9.38	4.38		E		
AC-J3/4-G-750-16*	4.00	11.38	5.38		.75		
AC-J3/4-G-937-4*	1.00	5.38	2.38		D		
AC-J3/4-G-937-6*	1.50	6.38	2.88		5.50	9.37	4.46
AC-J3/4-G-937-8*	2.00	7.38	3.38	2.75		SQ. IN.	SQ. IN.
AC-J3/4-G-937-12*	3.00	9.38	4.38		E		
AC-J3/4-G-937-16*	4.00	11.38	5.38		.75		
AC-J3/4-G-1143-4*	1.00	5.38	2.38		D		
AC-J3/4-G-1143-6*	1.50	6.38	2.88		5.75	11.43	5.50
AC-J3/4-G-1143-8*	2.00	7.38	3.38	3.00		SQ. IN.	SQ. IN.
AC-J3/4-G-1143-12*	3.00	9.38	4.38		E		
AC-J3/4-G-1143-16*	4.00	11.38	5.38		.69		
AC-J3/4-G-1360-4*	1.00	5.38	2.38		D		
AC-J3/4-G-1360-6*	1.50	6.38	2.88		5.75	13.60	6.63
AC-J3/4-G-1360-8*	2.00	7.38	3.38	3.25		SQ. IN.	SQ. IN.
AC-J3/4-G-1360-12*	3.00	9.38	4.38		E		
AC-J3/4-G-1360-16*	4.00	11.38	5.38		.62		

TRIPLE PISTON CYLINDERS						PISTON AREA	
MODEL NO.	STROKE	A	B	C	D & E	EXT.	RET.
AC-J3/4-G3-620-4*	1.00	7.38	2.38		D		
AC-J3/4-G3-620-6*	1.50	8.88	2.88		4.50	6.20	1.96
AC-J3/4-G3-620-8*	2.00	10.38	3.38	2.00		SQ. IN.	SQ. IN.
AC-J3/4-G3-620-12*	3.00	13.38	4.38		E		
AC-J3/4-G3-620-16*	4.00	16.38	5.38		.50		
AC-J3/4-G3-840-4*	1.00	7.38	2.38		D		
AC-J3/4-G3-840-6*	1.50	8.88	2.88		4.50	8.40	2.70
AC-J3/4-G3-840-8*	2.00	10.38	3.38	2.25		SQ. IN.	SQ. IN.
AC-J3/4-G3-840-12*	3.00	13.38	4.38		E		
AC-J3/4-G3-840-16*	4.00	16.38	5.38		.50		
AC-J3/4-G3-1087-4*	1.00	7.38	2.38		D		
AC-J3/4-G3-1087-6*	1.50	8.88	2.88		5.50	10.87	3.53
AC-J3/4-G3-1087-8*	2.00	10.38	3.38	2.50		SQ. IN.	SQ. IN.
AC-J3/4-G3-1087-12*	3.00	13.38	4.38		E		
AC-J3/4-G3-1087-16*	4.00	16.38	5.38		.75		
AC-J3/4-G3-1370-4*	1.00	7.38	2.38		D		
AC-J3/4-G3-1370-6*	1.50	8.88	2.88		5.50	13.70	4.46
AC-J3/4-G3-1370-8*	2.00	10.38	3.38	2.75		SQ. IN.	SQ. IN.
AC-J3/4-G3-1370-12*	3.00	13.38	4.38		E		
AC-J3/4-G3-1370-16*	4.00	16.38	5.38		.75		
AC-J3/4-G3-1680-4*	1.00	7.38	2.38		D		
AC-J3/4-G3-1680-6*	1.50	8.88	2.88		5.75	16.80	5.50
AC-J3/4-G3-1680-8*	2.00	10.38	3.38	3.00		SQ. IN.	SQ. IN.
AC-J3/4-G3-1680-12*	3.00	13.38	4.38		E		
AC-J3/4-G3-1680-16*	4.00	16.38	5.38		.69		
AC-J3/4-G3-2010-4*	1.00	7.38	2.38		D		
AC-J3/4-G3-2010-6*	1.50	8.88	2.88		5.75	20.10	6.63
AC-J3/4-G3-2010-8*	2.00	10.38	3.38	3.25		SQ. IN.	SQ. IN.
AC-J3/4-G3-2010-12*	3.00	13.38	4.38		E		
AC-J3/4-G3-2010-16*	4.00	16.38	5.38		.62		

* ADD ROD END STYLE (SEE PAGE 1 FOR OPTIONS)

ADDITIONAL STROKE LENGTHS ARE AVAILABLE IN .50" INCREMENTS

ALL PORTS 1/4-18 STANDARD PIPE TAP

Advanced Cylinder Products, LLC

THE LEADER IN PNEUMATIC CYLINDERS

PNEUMATIC CYLINDER - PRESSURE CHARTS

Dual Piston Cylinders

Group	Model	Piston Area (Sq. In.)		Cylinder Extend Force (Lbs.) @95% Eff. Line Pressure (P.S.I.)						
		Extend	Return	40	50	60	70	80	90	100
Light Duty	436	4.36	1.96	166	207	249	290	331	373	414
	584	5.84	2.70	222	277	333	388	444	499	555
	750	7.50	3.53	285	356	428	499	570	641	713
	937	9.37	4.47	356	445	534	623	712	801	890
	1143	11.43	5.50	434	543	652	760	869	977	1086
	1360	13.60	6.63	517	646	646	904	1034	1163	1292
Medium Duty	1575	15.81	7.51	601	751	901	1051	1202	1352	1502
	1840	18.46	8.84	701	877	1052	1228	1403	1578	1754
	2125	21.30	10.26	809	1012	1214	1416	1619	1821	2024
	2430	24.35	11.78	925	1157	1157	1619	1851	2082	2313
Heavy Duty	3030	30.58	14.68	1162	1453	1743	2034	2891	2615	2905
	3770	38.04	18.41	1446	1807	2168	2530	2891	3252	3614
	4600	46.29	22.53	1759	2199	2639	3078	3518	3958	4398
	5500	55.32	27.05	2102	2628	3153	3679	4204	4730	5255

Triple Piston Cylinders

Group	Model	Piston Area (Sq. In.)		Cylinder Extend Force (Lbs.) @95% Eff. Line Pressure (P.S.I.)						
		Extend	Return	40	50	60	70	80	90	100
Light Duty	620	6.20	1.96	236	295	353	412	471	718	589
	840	8.40	2.70	319	399	479	559	638	718	798
	1087	10.87	3.53	413	516	620	723	826	929	1033
	1370	13.70	4.47	521	651	781	911	1041	1171	1302
	1680	16.80	5.50	638	798	958	1117	1277	1436	1596
	2010	20.10	6.63	764	955	1146	1337	1528	1719	1910
Medium Duty	2320	22.99	7.51	874	1092	1310	1529	1747	1966	2184
	2710	26.97	8.84	1025	1281	1537	1794	2050	2306	2562
	3140	31.24	10.26	1187	1484	1781	2077	2374	2671	2968
	3600	35.81	11.78	1361	1701	2041	2381	2722	3062	3402
Heavy Duty	4450	44.86	14.68	1705	2131	2557	2983	3409	3836	4262
	5550	56.05	18.41	2130	2662	3195	3727	4260	4792	5325
	6800	68.42	22.53	2600	3250	3900	4550	5200	5850	6500
	8150	81.97	27.05	3115	3894	4672	5451	6230	7008	7787

Advanced Cylinder Products, LLC

THE LEADER IN PNEUMATIC CYLINDERS

Phone: 586-991-2445 **Fax: 267-295-8585**